YDS60-80 Smart Power Sensor
Quick Guide

Issue: 03
Date: 2025-04-16

1 Overview

1.1 Dimensions

YDS60-80

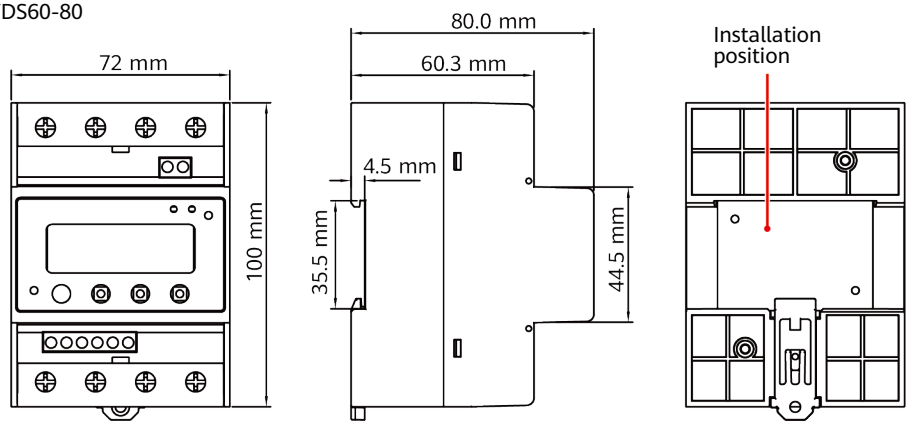

NOTE

The dimensional tolerance is ± 1 mm.

1.2 Appearance

Specifications on the front panel

Nameplate

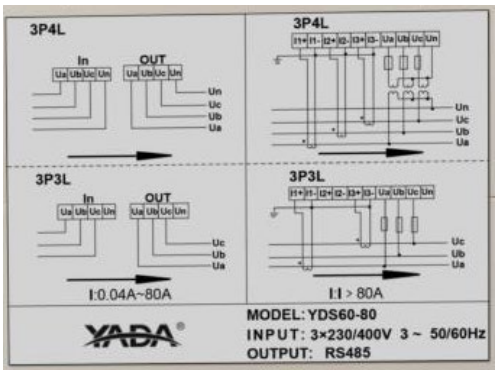

1.3 Key Specifications

Category	YDS60-80
Nominal voltage	230 V AC/400 V AC, 50 Hz/60 Hz
Current measurement range	Direct connection: 0–80 A Connection through current transformers: > 80 A
Voltage measurement range	90–1000 V (line voltage; potential transformers are required if the voltage is greater than 500 V)
Electricity metering accuracy	Class 1 (error within ±1%)
Power grid system	Three-phase four-wire or three-phase three-wire
Baud rate	4800/9600/19200/115200 bps (default value: 9600 bps)
Operating temperature	–25℃ to +60℃
Installation mode	Guide rail-mounted
Certification	CE, RCM, and UKCA

1.4 Port Definition

- Input voltage: When the line voltage is less than or equal to 500 V, connect the meter directly. When the line voltage is greater than 500 V, connect the meter through potential transformers.
- Input current: When the input current is 0 A to 80 A, connect the meter directly (channel 1). When the input current is greater than or equal to 80 A, connect the meter through current transformers (channel 2).

Cable Inlet

Cable Outlet

2 Installing the YDS60-80

1. Install the Smart Power Sensor on the standard guide rail of DIN35mm.
2. Press the Smart Power Sensor downwards onto the guide rail, and then push it in place along the guide rail.

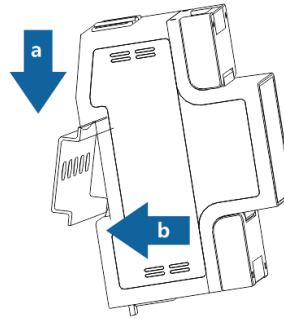

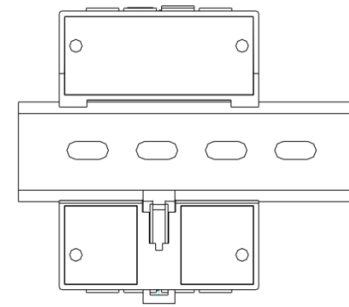

3 Installing Cables

3.1 Preparing Cables

Cable	Port	Type	Conductor Cross-sectional Area Range	Outer Diameter	Source
Channel 1 voltage cable	Ua IN and OUT	Single-core outdoor copper cable	25 mm^2	10 mm	Prepared by the customer
	Ub IN and OUT				
	Uc IN and OUT				
	Un IN and OUT				
Channel 2 voltage cable	Ua IN	Single-core outdoor copper cable	4–25 mm^2	5–10 mm	Prepared by the customer
	Ub IN				
	Uc IN				
	Un IN				
Channel 2 current transformer cable	Ia*	Single-core outdoor copper cable	2–4 mm^2	3–5 mm	Prepared by the customer or supplied with current transformers
	Ia				
	Ib*				
	Ib				
	Ic*				
	Ic				
Communications cable	RS485A	Two-core outdoor shielded twisted pair copper cable	0.25–1.5 mm^2	4–11 mm	Supplied by the manufacturer
	RS485B				

NOTE

The maximum torque of Ua, Ub, Uc and Un terminal screws is 1.7 N·m, and the recommended torque is 0.9–1.1 N·m. The maximum torque of Ia*, Ia, Ib*, Ib, Ic*, Ic, RS485A and RS485B terminal screws is 0.4 N·m, and the recommended torque is 0.15–0.25 N·m.

3.2 Wiring Scenarios

Current	≤ 80 A		> 80 A		≥ 0 A	
Line voltage	≤ 500 V				> 500 V	
Connection mode	Current and voltage direct connection		Connection through current transformers and voltage direct connection		Connection through current transformers and potential transformers	
Connection setting	Direct connection: SPEC = 1 (default)		Connection through transformers: SPEC = 0			
Current transformation ratio	CT = 1 (default)		CT = Ratio of the installed current transformer			
Potential transformation ratio	PT = 1.0 (default)				PT = Ratio of the installed potential transformer	
Wiring mode	3P4W: net = n.34 (default)	3P3W: net = n.33	3P4W: net = n.34 (default)	3P3W: net = n.33	3P4W: net = n.34 (default)	3P3W: net = n.33

NOTE

- You need to set parameters after cable connections are complete. For details, see section 4 "Display and Parameter Settings".
- This meter is generally used in commercial and industrial high-current scenarios. In external CT scenarios, the precision of the secondary-side current is ±5 mA. For example, if a CT with a transformer ratio of 400/1 is selected, the error is ±2 A. This meter is not recommended in scenarios where the plant power is low or the control precision of the grid-connection point is high. Instead, use a meter with higher precision.

3.3 Current and Voltage Direct Connection (Current ≤ 80 A and Line Voltage ≤ 500 V)

SmartLogger networking

- Three-phase four-wire connection

NOTE

In the SmartLogger networking scenario, the power meter is connected to the SmartLogger. In the non-SmartLogger networking scenario, the power meter is connected to the inverter.

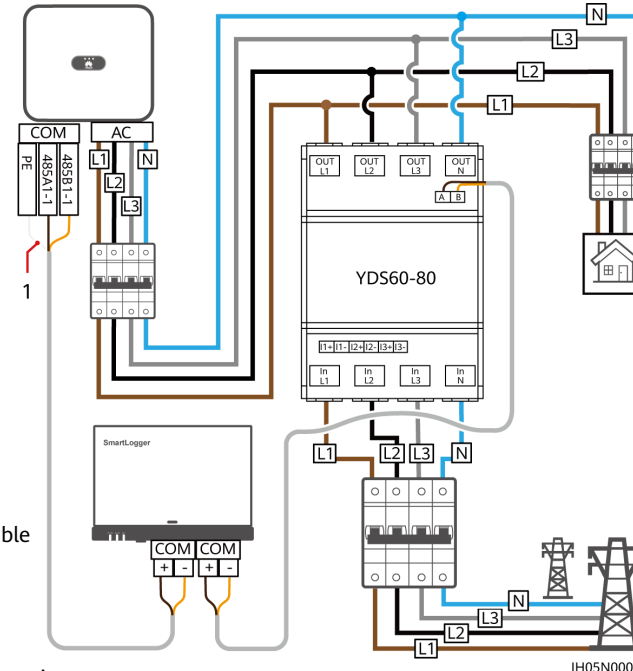

(1) Shield layer of the signal cable

- Three-phase three-wire connection

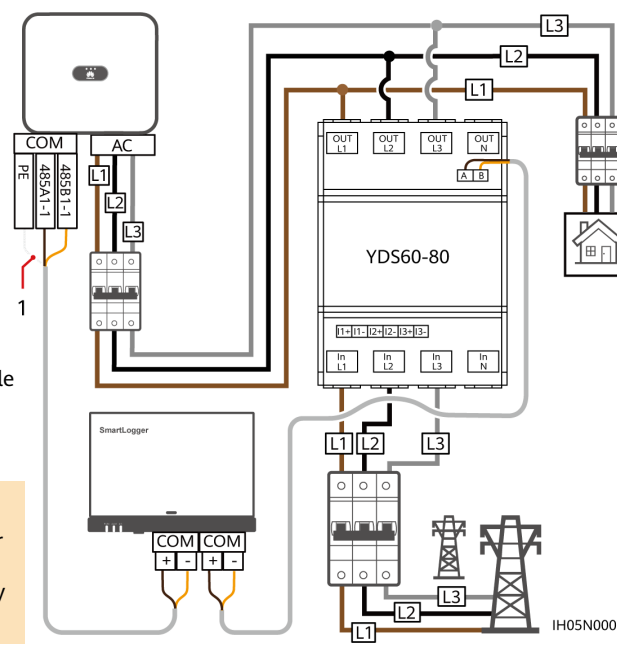

(1) Shield layer of the signal cable

NOTE

You need to set parameters after cable connections are complete. For details, see section 4 "Display and Parameter Settings".

Smart Dongle networking

- Three-phase four-wire connection

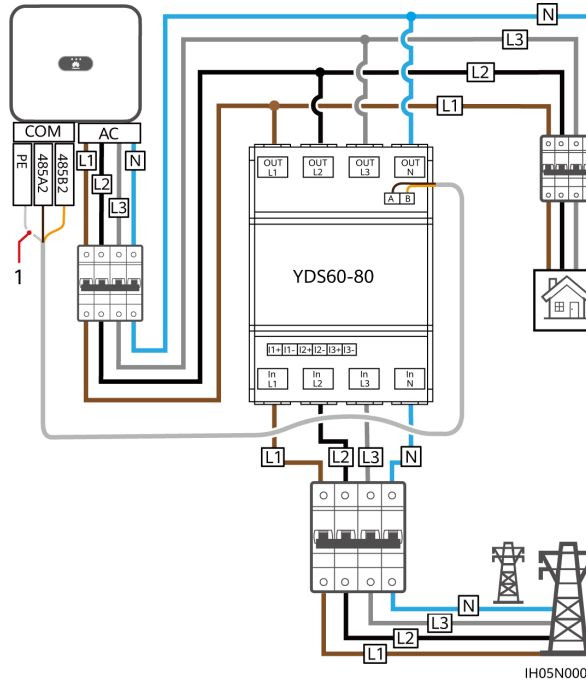

(1) Shield layer of the signal cable

- Three-phase three-wire connection

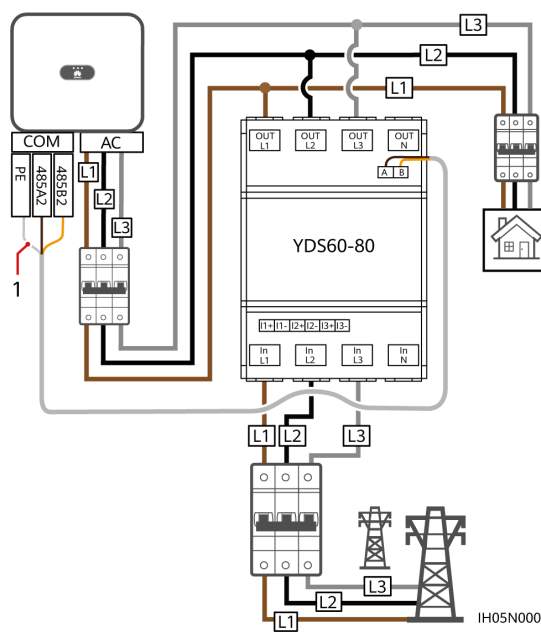

(1) Shield layer of the signal cable

NOTE

You need to set parameters after cable connections are complete. For details, see section 4 "Display and Parameter Settings".

3.4 Connection Through Current Transformer and Voltage Direct Connection (Current > 80 A, Line Voltage ≤ 500 V)

Current transformers specifications: The accuracy class is 0.5, and the current on the secondary side is 1 A or 5 A.

SmartLogger networking

- Three-phase four-wire connection

NOTE

In the SmartLogger networking scenario, the power meter is connected to the SmartLogger. In the non-SmartLogger networking scenario, the power meter is connected to the inverter.

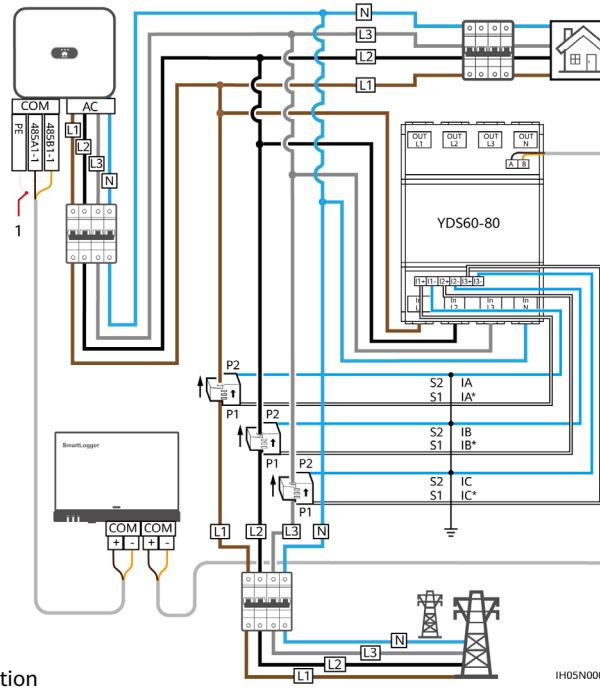

(1) Shield layer of the signal cable

- Three-phase three-wire connection

CAUTION

Please ensure that the ground cable is installed securely. Poor grounding may cause electric shocks.

NOTE

- You need to set parameters after cable connections are complete. For details, see section 4 "Display and Parameter Settings".
- For the three-phase three-wire connection, phase B does not need to connect to a current transformer.

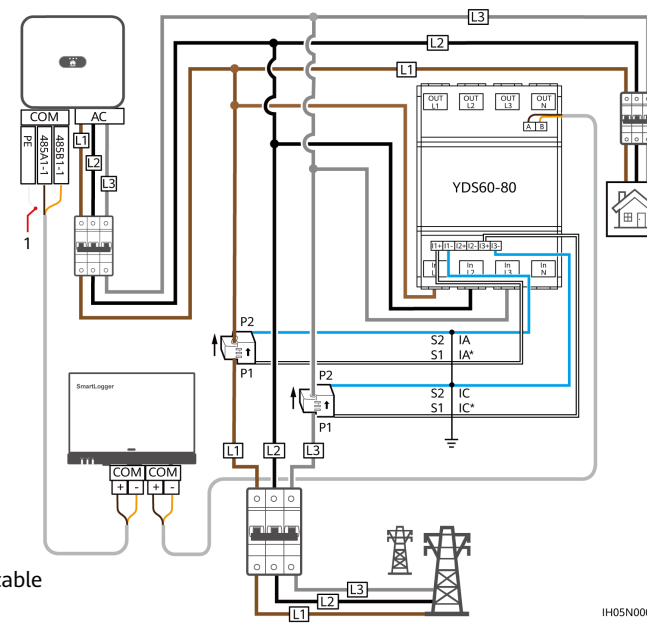

(1) Shield layer of the signal cable

Smart Dongle networking

- Three-phase four-wire connection

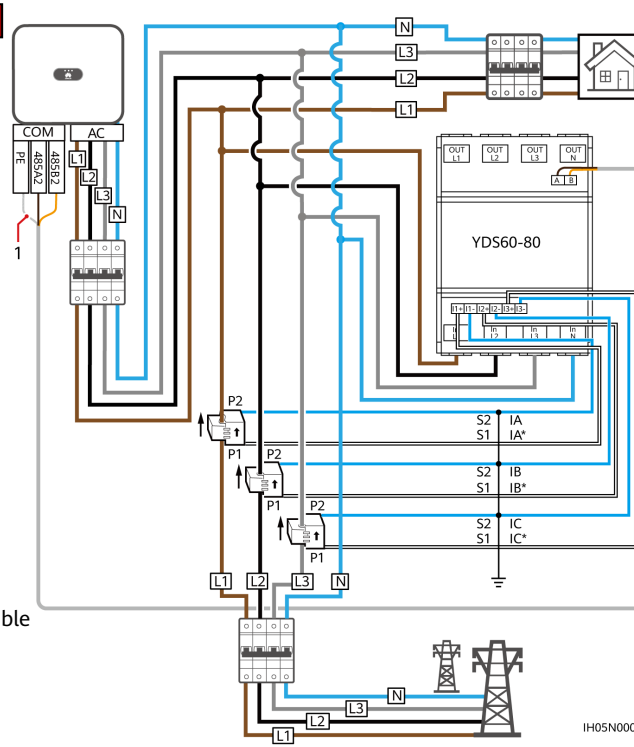

(1) Shield layer of the signal cable

- Three-phase three-wire connection

⚠ CAUTION

Please ensure that the ground cable is installed securely. Poor grounding may cause electric shocks.

NOTE

- You need to set parameters after cable connections are complete. For details, see section 4 "Display and Parameter Settings".
- For the three-phase three-wire connection, phase B does not need to connect to a current transformer.

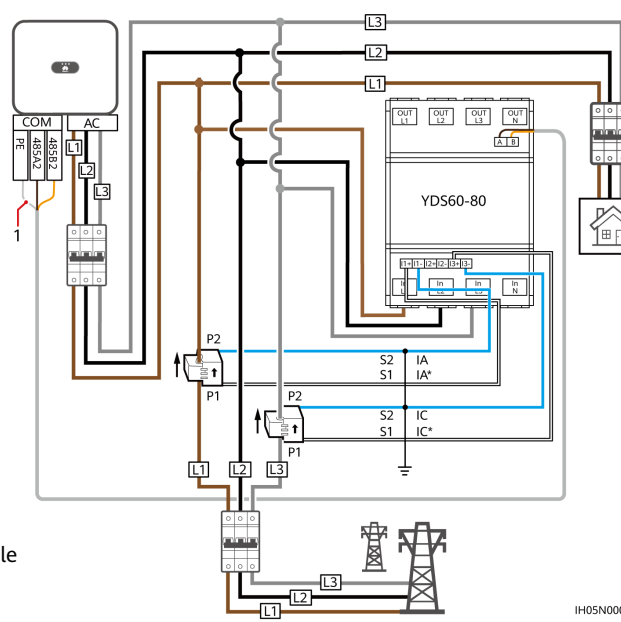

(1) Shield layer of the signal cable

3.5 Connection Through Current Transformer and Potential Transformer (Current ≥ 0 A, Line Voltage > 500 V)

- Three-phase four-wire connection

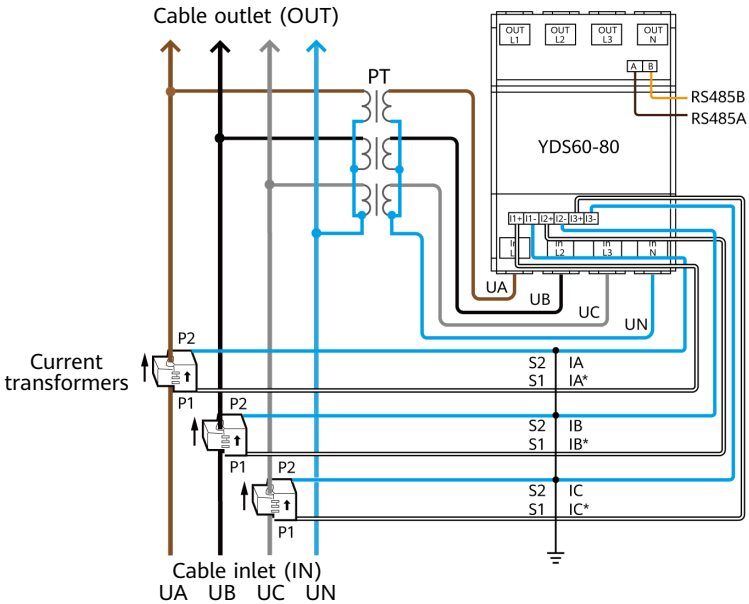

- Three-phase three-wire connection

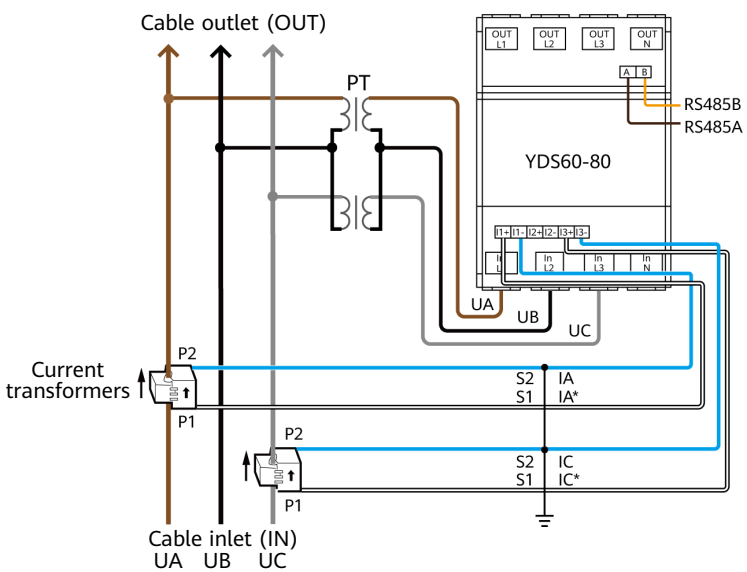

⚠ CAUTION

Please ensure that the ground cable is installed securely. Poor grounding may cause electric shocks.

NOTE

You need to set parameters after cable connections are complete. For details, see section 4 "Display and Parameter Settings".

4 Display and Parameter Settings

4.1 Display

The button → is used to switch the displays. Set parameter **disp** to enable the rotation display function.

No.	Display	Description	No.	Display	Description
1	Imp. 10000.00 kWh	Positive active energy = 10000.00 kWh	2	Exp. 2345.67 kWh	Negative active energy = 2345.67 kWh
3	NO. n1-9600	None parity, 8 data bits, and 1 stop bit; baud rate = 9600 bps (default)	4	NO. ----011	011 represents address (default)
5	UA 220.0 V	Phase A voltage = 220.0 V	6	Ub 220.1 V	Phase B voltage = 220.1 V
7	UC 220.2 V	Phase C voltage = 220.2 V	8	IA 5.000 A	Phase A current = 5.000 A
9	Ib 5.001 A	Phase B current = 5.001 A	10	IC 5.002 A	Phase C current = 5.002 A
11	Pt 3.291 kW	Total phase active power = 3.291 kW	12	PA 1.090 kW	Phase A active power = 1.090 kW
13	Pb 1.101 kW	Phase B active power = 1.101 kW	14	PC 1.100 kW	Phase C active power = 1.100 kW
15	Ft 0.500	Total phase power factor PFt = 0.500	16	FA 1.000	Phase A power factor PFa = 1.000
17	Fb 0.500	Phase B power factor PFb = 0.500	18	FC-0.500	Phase C power factor PFc = –0.500

4.2 Parameter Settings

No.	Parameter	Value Range	Description
1	Ct	1–6553	Current transformer ratio
2	Pt	0.1–999.9	Potential transformer ratio
3	Prot	1: 645 2: n.2 3: n.1 4: E.1 5: 0.1	Communication protocol switchover: 1: Factory mode 2: None parity, 2 stop bits, n.2 3: None parity, 1 stop bit, n.1 4: Even parity, 1 stop bit, E.1 5: Odd parity, 1 stop bit, 0.1
4	Addr	1–247	Modbus communication address
5	bAud	0: 1.200 1: 2.400 2: 4.800 3: 9.600 4: 19.20 5: 115.2	Communication baud rate: 0: 1200 bps 1: 2400 bps 2: 4800 bps 3: 9600 bps 4: 19200 bps 5: 115200 bps
6	nEt	0: n.34 1: n.33	Wiring mode: 0: n.34, three-phase four-wire 1: n.33, three-phase three-wire
7	dISP	0–30	Rotation display time (s): 0: Fixed display 1–30: Time interval of rotation display
8	bLCd	0–30	Backlight illumination time control (minutes): 0: Steady on 1–30: Time of backlight illumination without key operation
9	SPEC	0: ct 1: dc	Channel switchover: 0: Transformer connection 1: Direct connection

4.3 Parameter Setting Operations

Button description: SET means "confirm" or "cursor move" (when inputting numbers or parameters), ESC means "exit", and → means "add". The default user password is **701**.

- Set wiring mode (three-phase four-wire or three-phase three-wire) and channel switchover (direct connection or current transformer connection):

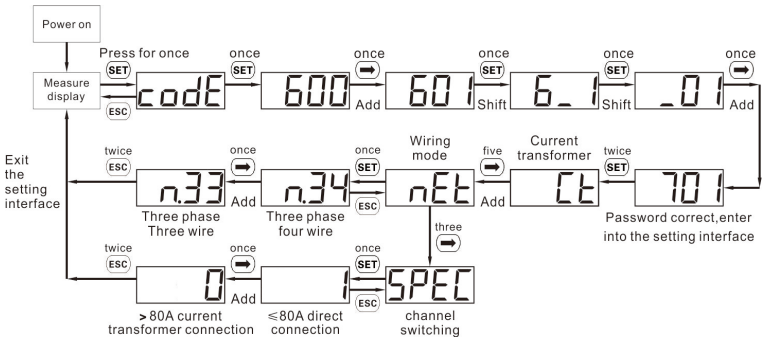

- Set the current transformation ratio or potential transformation ratio:

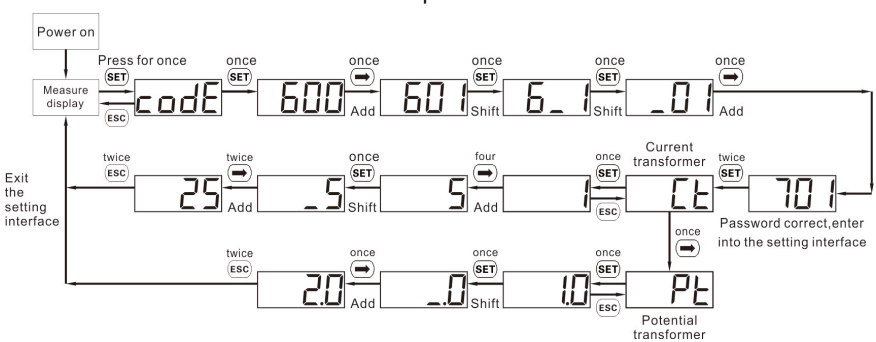

- Set communication address or baud rate:

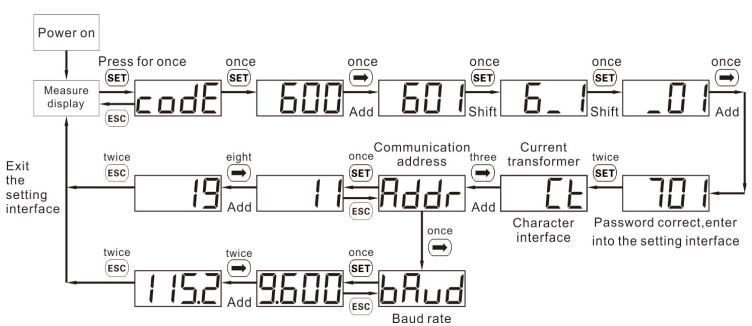

NOTE

The communication parameters are set for the Smart Power Sensor before delivery. If the communication is abnormal, check and set the parameters.

- Modify user password:

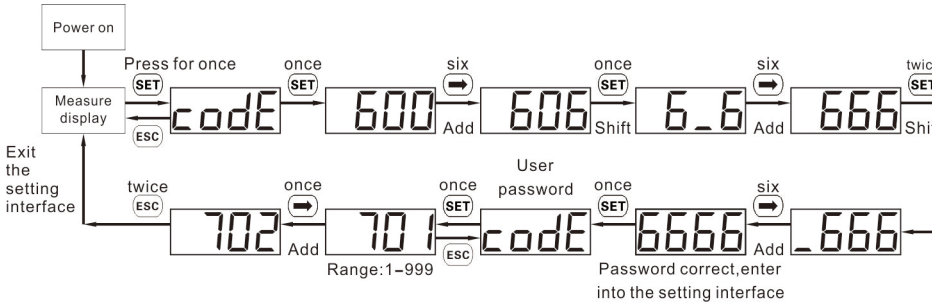

5 Troubleshooting

Symptom	Cause Analysis	Troubleshooting Method
No display after power-on	1. The cable connection is incorrect. 2. The voltage supplied to the meter is abnormal.	1. Connect the cables correctly (see wiring diagrams). 2. Supply the correct voltage based on the specifications.
Abnormal RS485 communication	1. The RS485 communication cable is disconnected, short-circuited, or reversely connected. 2. The communication address, baud rate, data bit, and parity bit of the meter do not match those of the inverter.	1. If the communication cable is faulty, replace it. 2. Set the communication address, baud rate, data bit, and parity bit of the meter to be the same as those of the inverter by pressing buttons. For details, see "Parameter Settings".
Inaccurate metering	1. The cable connection is incorrect. Check whether the corresponding phase sequence of voltage and current is correct. 2. Check whether the high and low ends of the current transformer inlet are reversely connected. If the values Pa, Pb, and Pc are negative, the high and low ends are connected incorrectly.	1. Connect the cables correctly (see wiring diagrams). 2. If a negative value is displayed, change the cable connection for the current transformer to ensure that the high and low ends are connected correctly.

6 Installation Verification

1. Check that all mounting brackets are securely installed and all screws are tightened.
2. Check that all cables are reliably connected in correct polarity without short circuit.