VN	VIETNAM

Diagram / Parts List

DF0300

DRIVER DRILL

2021/07

(VN) DF0300 / DRIVER DRILL

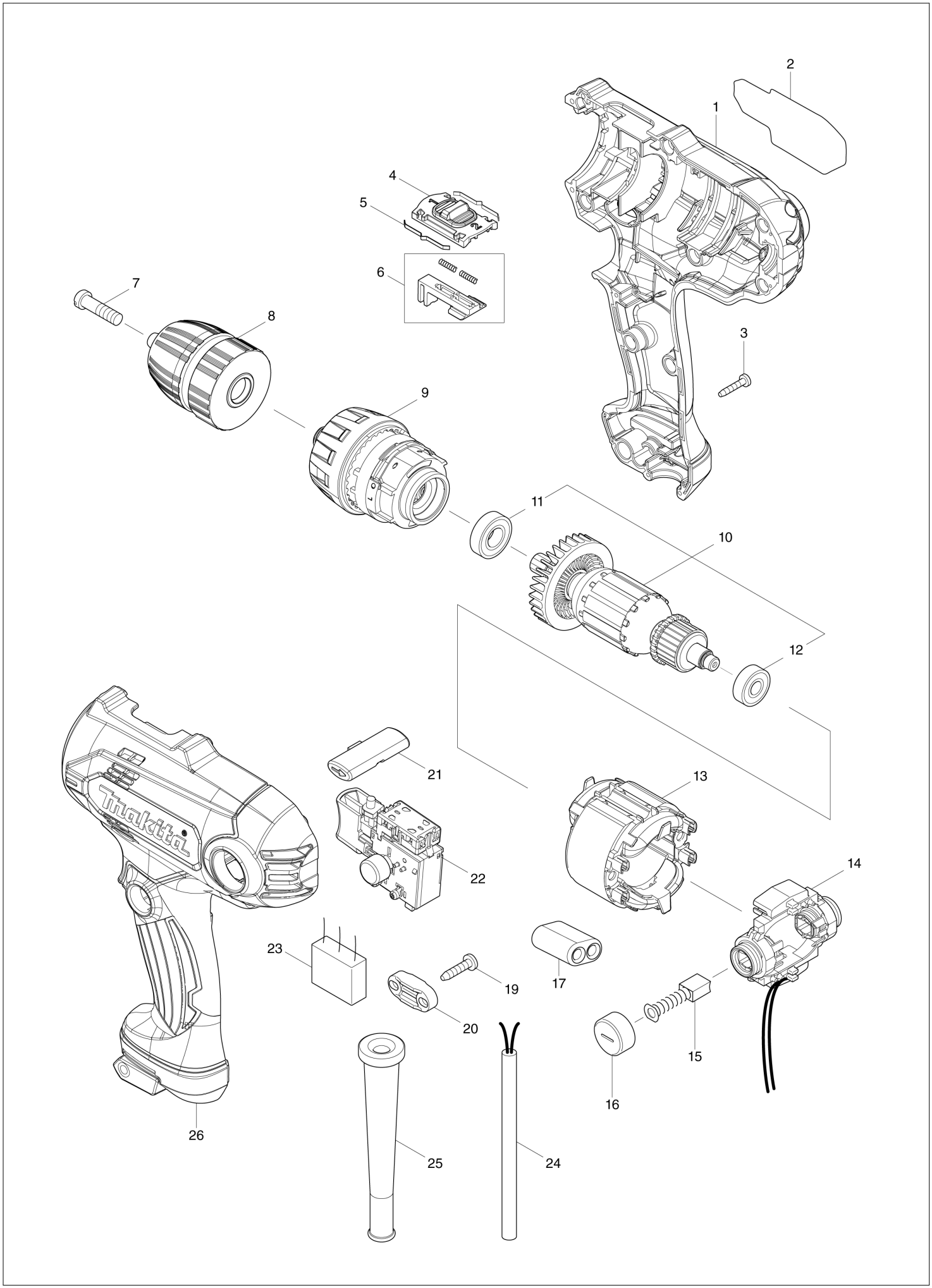

VN	VIETNAM

DF0300 / DRIVER DRILL

Item	Sub	Parts No.	Parts Description	Qty	I/C	E/C No.	Close No.	Remark
001		183M32-1	HOUSING SET	1				
	C10	263002-9	RUBBER PIN 4	4				
	C20	252126-6	HEX. LOCK NUT M4-7	2				
	D10		INC. 26					
002		856B70-7	DF0300 NAME PLATE	1				
003		266429-2	TAPPING SCREW 3X16	9				
004		459026-3	SPEED CHANGE LEVER	1				
005		232493-5	LEAF SPRING	2				
006		127357-5	CHANGE LEVER ASSEMBLY	1				
	C10	233025-1	COMPRESSION SPRING 2	2				
007		251468-5	- FLAT HEAD SCREW M6X22	1				
008		766012-0	KEYLESS DRILL CHUCK 10	1				
009		127356-7	GEAR ASSEMBLY	1				
010		517998-9	ARMATURE ASS'Y 220V	1				
	D10		INC. 11,12					
011		210069-8	BALL BEARING 6900DDW	1				
012		210062-2	BALL BEARING 607ZZ	1				
013		634738-1	FIELD	1				
014		632P52-5	HOLDER ARM UNIT	1				
015		B-80391	CARBON BRUSH SET CB-411A	1				
016		643928-5	BRUSH HOLDER CAP	2				
019		266326-2	TAPPING SCREW 4X18	2				
020		687124-5	STRAIN RELIEF	1				
021		457210-4	F/R CHANGE LEVER	1				
022		651393-4	SWITCH DGQ-1104H-01	1				
023		632N91-3	CAPACITOR UNIT	1				
024		691065-9	POWER SUPPLY CORD 0.75-2-2.5	1				
025		682559-5	CORD GUARD 8	1				
026		183M32-1	HOUSING SET	1				
	C10	263002-9	RUBBER PIN 4	4				
	C20	252126-6	HEX. LOCK NUT M4-7	2				
	D10		INC. 1					
A01		784637-8	+- BIT 2-45	1				

Interchange
O : Yes
X : No
< : the new part can be substituted for the current.
> : the current part can be substituted for the new.
S : Interchangeable as a set.