VN	VIETNAM

Diagram / Parts List

HP330D

CORDLESS HAMMER DRIVER DRILL

2021/01

(VN) HP330D / CORDLESS HAMMER DRIVER DRILL

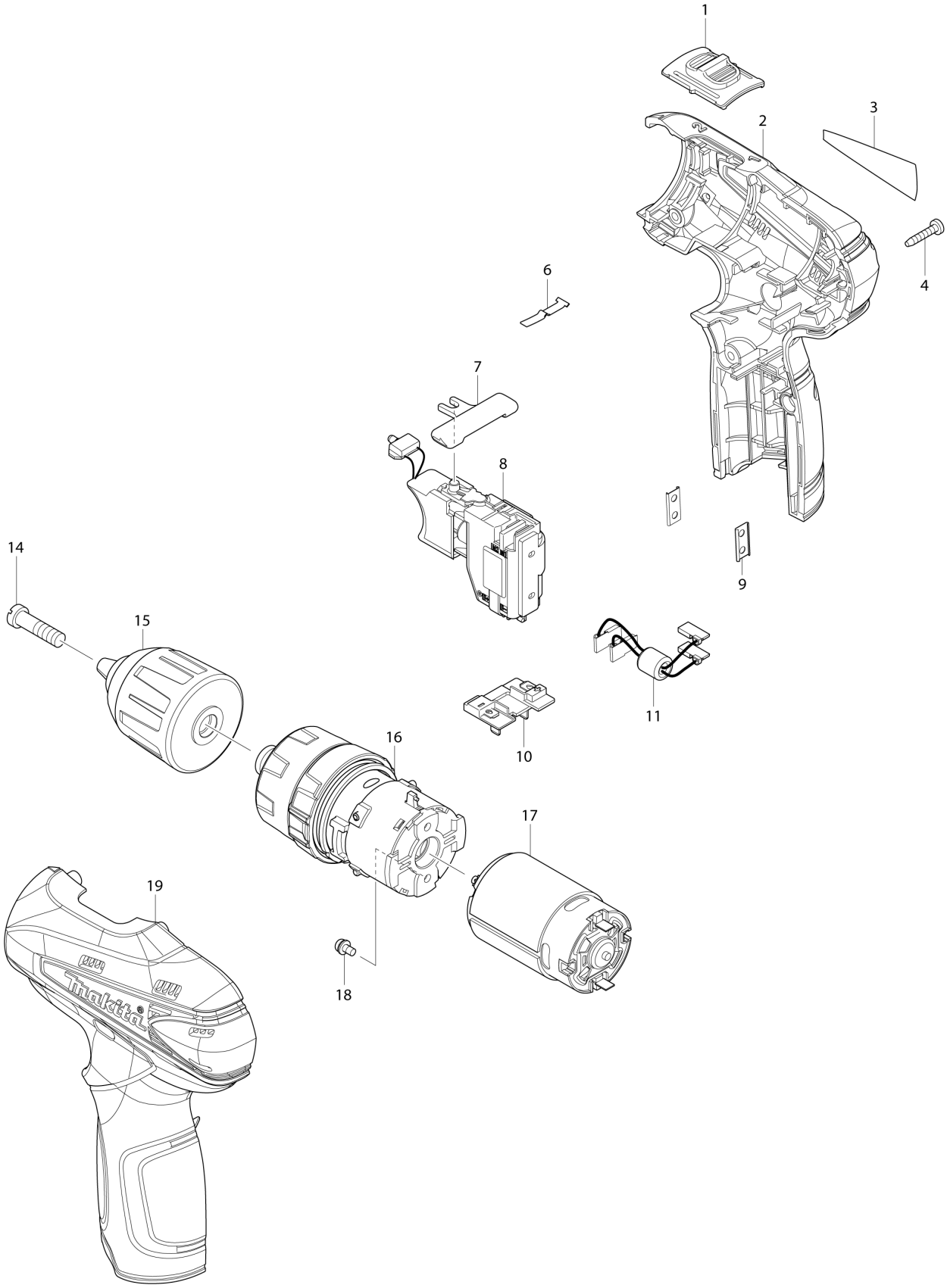

VN	VIETNAM

HP330D / CORDLESS HAMMER DRIVER DRILL

Item	Sub	Parts No.	Parts Description	Qty	I/C	E/C No.	Close No.	Remark
001		126233-0	SPEED CHANGE LEVER ASSEMBLY	1				
	C10	231433-0	COMPRESSION SPRING 4	2				
002		187359-3	HOUSING SET	1				
	D10		INC. 19					
003		897342-9	HP330D NAME PLATE	1				
004		266429-2	TAPPING SCREW 3X16	6				
006		232239-9	LEAF SPRING	1				
007		450504-6	F/R CHANGE LEVER	1				
008		650691-3	SWITCH C3HW-3A-EF1M	1				
009		345998-7	SET PLATE	2				
010		643830-2	TERMINAL	1				
014		251468-5	- FLAT HEAD SCREW M6X22	1				
015		766003-1	KEYLESS DRILL CHUCK 10	1			A7949	
015-1		763229-6	KEYLESS DRILL CHUCK 10	1	<	A7949		
016		126148-1	GEAR ASSEMBLY	1			B0280	
016-1		123502-0	GEAR ASS'Y	1	O	B0280		
017		629962-9	DC MOTOR	1				
018		911003-8	PAN HEAD SCREW M3X6	2				
019		187359-3	HOUSING SET	1				
	D10		INC. 2					
020		533020-4	LEAD ASS'Y	1		Y06340		
021		533019-9	LEAD ASS'Y	1		Y06340		
A01A		168467-9	HOLSTER	1				
A02A		***DC10WA	DC10WA BATTERY CHARGER	1				
A03A		194550-6	BATTERY BL1013 SET	2			C9571	
A03-1A		196066-7	BATTERY BL1013 SET	2	O	C9571		
A04A		784203-1	PHILLIPS BIT 2-65	1				
A05A		824781-0	PLASTIC CASE	1				
A06A		821525-9	PLASTIC CARRYING CASE	1				
	C10	417724-5	LATCH	2				
A07A		800A89-2	HP330DWE PLASTIC CASE LABEL	2				

A:HP330DWE(H)

Interchange
O : Yes
X : No
< : the new part can be substituted for the current.
> : the current part can be substituted for the new.
S : Interchangeable as a set.